New & Improved VariFlo Plural Component Equipment

Low Pressure Polymer Dispensing Equipment

GeoCHEM INCORPORATED
www.geocheminc.com
Ph: 907-562-5755
206-973-2565
206-973-7338
Fax: 907-562-3032

Table of Contents

Page One	Cover
Page Two	Table of Contents and Start Up/Setup
Page Three	Start Up Continued
Page Four	Shutdown
Page Five	Trouble-Shooting
Page Six	Operating Tips and Pump Diagram & Cutaways
Page Seven	Operating Tips and Pump Diagram & Cutaways Continued
Page Eight	Gun Assembly
Page Nine	Rheostat Control
Page Ten	Warranty

Start Up/Setup

**** Do Not plug machine into outlet and operate without fluid materials attached to pumping unit. Never operate pumps dry. This can cause severe damage to the pumps.***

1) Check that all fluid and air hose fittings are securely attached. Inspect for any severe bends in the hose set at the gun-block & both JIC pump fittings on the outlet side.

2) Be careful not to over-tighten JIC hose swivel fittings. Also, it is not necessary to apply thread tape on the threads of the male and female JIC fittings.

3) Proceed to attach a ½' clear hose and clamp to the push barb fittings on the container and backside of the pumps with the 'A' & 'B' materials. Be certain to remove any air bubbles. This can be done easily, by loosening the clamp, bending the clear tubing away from the barb fitting at the pump until the air bubble is removed. Place a rag or container under the fitting to capture any material that may leak. Re-tighten clamp securely

** Remember to always gravity feed the materials. Never siphon feed, this will cause a strain on the pumps as the fluid level in the containers drop and can cause of ratio materials*

Start Up Continued

** * When using high-pressure transfer pumps to feed the Vari-Flo unit, it is necessary to use an air pressure regulator and a lockout ball valve to control the inlet fluid pressure to the Vari-Flo pumps. This regulator must be set at 40psi maximum to prevent serious damage to the pump seals surrounding the pump shafts.*

4) Prepare for a ratio check. Check that the control box switch is in the "off" position and speed dial on remote is set at "0". Plug in the main power source. Have a container ready for the discharging of the materials. Flip power switch to "on" and slowly turn speed dial to 25 to allow pumps to be primed and fill the hose set. After a few seconds, the speed dial may be increased to 50. Try not to go faster than 50 until flow of the material appears. This is to avoid entrapping air. When a consistent flow rate is achieved, capture the two materials simultaneously into separate clear equal volume containers. Fill the containers to an adequate level (half full into a quart container is sufficient). Turn speed dial back down to zero. Close gun handle back to vertical position.

5) Place the containers side by side onto a level surface and inspect the containers to be equal in volume with each other (for 1:1 ratio). If the materials are not level, check ratio again and be certain all air has been removed from the lines. ** All pumps are individually re-machined to a precise volumetric ratio.*

6) After the ratio is correct. Attach a spiral mixer to the gun end and secure with the mixer-retaining nut.

7) Open gun valve handle forward. Turn the machine back to "on", increase speed dial to desired flow rate

SHUTDOWN

1) Turn speed dial down to zero.

2) Flip switch to “off”.

3) Close gun valve handle upwards. * *Never air purge with gun valve open. This will force material back into the hoses and cause for replacement of the hoses. If this does happen, immediately open gun valve and turn machine on and run material through the hoses for 60 seconds at a 50 speed setting. If fluid fails to appear replace contaminated hose(s).*

4) Immediately open air purge valve, on the right side of the gun block, to clean spiral mixer. * *If mixer has solidified material never open air purge. Always remove mixer. Air purging with a clogged mixer will cause material to cross over, reverse back into the gun block, and solidify in the fluid ports.*

5) When finished, remove spiral mixer. *Note: spiral mixers are disposable and usage is limited. The cost in repairs and labor are typically 50-100 times more costly than the replacement cost of a new mixer.*

6) Air purge remaining resin from the gun block.

7) Point gun downward. Wipe clean the threads on the gun block and the retaining nut threads with an approved solvent. Acetone or MEK are most often used. * *Avoid solvents with large amounts of water, paint thinners and de-greasers.*

8) Store gun pointing upwards.

TROUBLESHOOTING

Insufficient flow rate or material spitting from gun :Gun port(s) blocked. **Solution:** clean out ports using drill bit or dry wall screw. Remove 1/8" set screw from ISO (A) side of gun block and clean ISO port. Air in feed line(s). **Solution:** Inspect, by removing gun from hose set & run material into supply containers to re-circulate air out. Re-attach gun after cleaning. Gun valve handle not open completely.

Gun valves damaged or clogged. **Solution:** Clean or replace. Air purge line leaking or air purge valve slightly or completely open. **Solution:** Close valve. Repair or replace air tubing, fitting. ***Regular maintenance of the gun assembly will prevent major repairs. Do not try to air purge a clogged mixer.** Pumps do not pump material after removing hose set or gun from hose set: Material supply is low or empty. **Solution:** replenish material Air in feed line(s) **Solution:** after removing air, securely tighten all clamps and inspect for cracks or pinholes in feed hose. Replace feed hoses, regularly. Blockage on inlet or outlet side of pump. **Solution:** clean out inlet & outlet fittings and ports. *Be certain pumps are turning. Remove pumps from mounts and manually turn pump. If pumps fail to turn, pumps need to be cleaned out and may need to be rebuilt. No material flow: Motor not turning. **Solution:** Check if power is being provided or drive switch has been clicked on. Fluid supply is low or empty. Gun valve is closed. **Solution:** Open gun valve handle. Never turn machine controls on with gun valve closed. Power source is insufficient. Plugs are not secure. ISO pump may be frozen or blocked. **Solution:** Replace or repair pump. Pump is noisy: Pump is cavitating or being starved. **Solution:** increase suction fitting size, reduce feed hose length or slow down pump. Check material level. If pump is making a grinding sound, pump is dry. Stop motor immediately and check material level. **Trouble** Pump is not producing regular flow rate: Air leak in suction line. **Solution:** replace feed hose. Air leak around pump shaft. **Solution:** replace seal(s). "A" side pump has two seals. "B" side only one. Check that all fittings and clamps are tight. Inspect for material leaking from pumps or fittings.

Operating Tips

Install pump as close to supply tanks as possible. Keep pump feed hoses six feet or less.

Provide adequate working space around the pumping unit. Use large, short, and straight suction fittings.

Check for proper rotation. Rotation is to be towards the gun.

Check all hoses are correctly attached to corresponding pumps and gun fittings. Ex: “A” side hose to “A” side pump has male JIC fitting, “B” side hose to “B” side pump has female swivel JIC fitting.

Pump shafts rotate freely by hand.

When using a generator for power, be sure it meets the requirements for the PWM Drive 15 amps & the Mini Compressor 4.3 amps @ 115 volts

Pump Diagrams and Cutaways

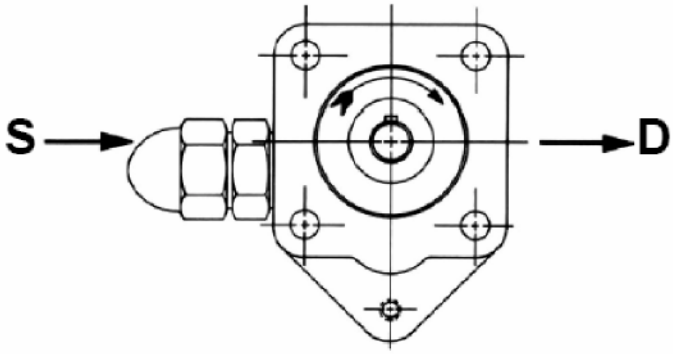

FIGURE 1
Clockwise Rotation of SG-04 & SG-05
(view from end of shaft)

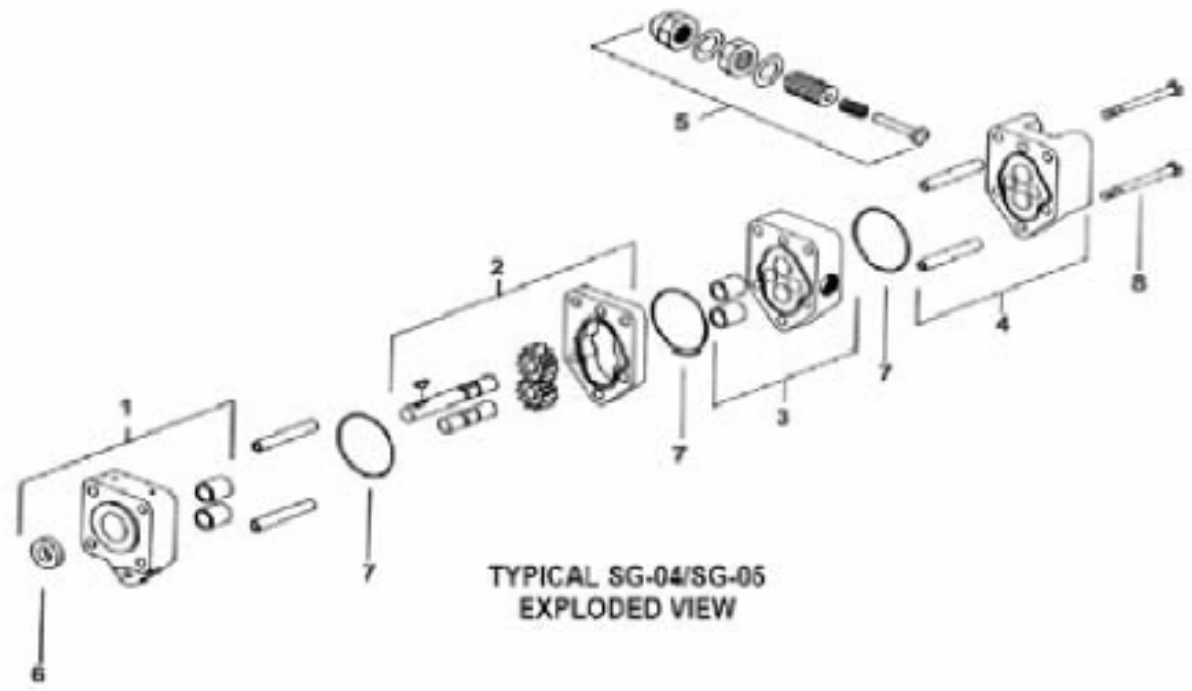

TYPICAL SG-04/SG-05
EXPLODED VIEW

ITEM	DESCRIPTION	ITEM	DESCRIPTION
1.	Bracket, lipseal & bearing section	5.	Relief valve kit
2.	Match ground casing & (2) gears, driver & driven shafts	6.	Lipseal
3.	Separation plate & bearing assy.	7.	O-ring
4.	Head and alignment sleeve assy.	8.	Assembly capscrews

Gun Assembly

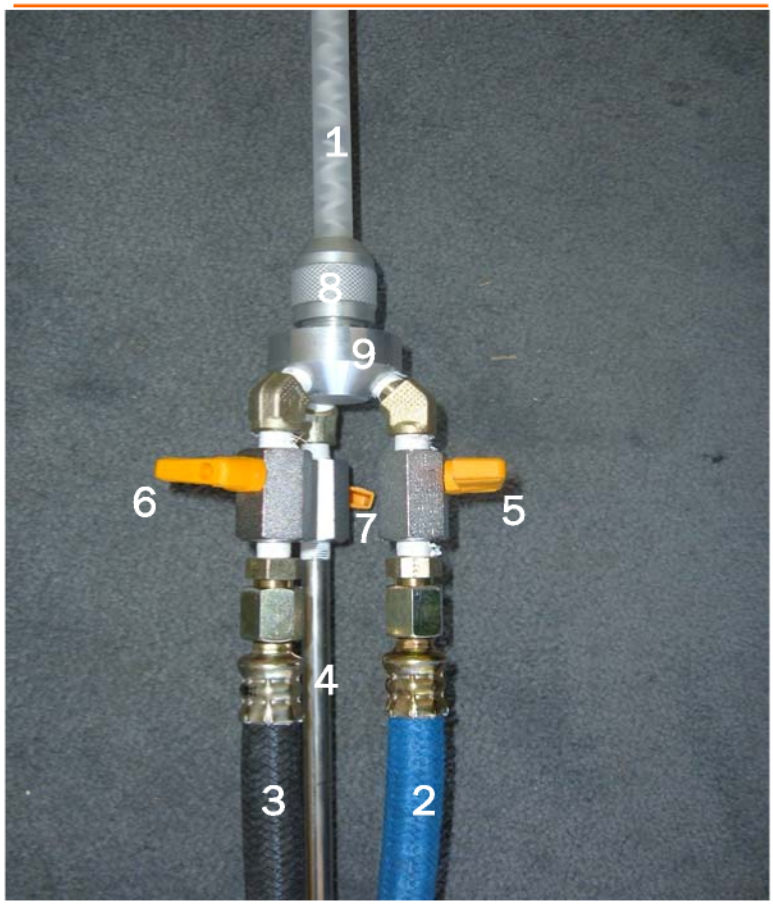

1: Static Mixer
2: B Side Feed Line
3: A Side feed Line
4: Air Line
5: B Side Flow Valve
6: A Side Flow Valve
7: Air Flow Valve
8: Static Mixing Tube Retaining Nut
9: Manifold

Rheostat Control

The Rheostat control controls the flow of polymer to the static mixing tube. It will always deliver polymer in an even ratio to the static mixing tube. Should polymer go off ratio then check that the A and B side flow regulators (numbers 5 and 6 in the gun assembly diagram) are in the fully opened position or that there is no obstruction in the polymer lines.

The Vari-Flo Low Pressure Polymer Dispensing Equipment can also be configured for 2 five gallon units or 2-15 gallon units depending on job requirements.

LIMITED WARRANTY

Motor, Controller and Compressor

For a period of 12 months from the date of original purchase, GeoCHEM, Inc will repair or replace, without charge, items returned which upon our examination proves to be defective in material or workmanship. These items are: PM-DC Motor, *1/6hp Compressor and PWM Motor controller. This warranty is valid if the unit has not been tampered with by unauthorized persons, misused, abused or improperly installed. The foregoing is in lieu of any warranty or guarantee, expressed or implied.

Fluid Pumps

For a period of six months from date of original purchase, GeoCHEM, Inc guarantees the fluid pumps to be accurate in ratio and performance. GeoCHEM Inc will not be responsible for any expense incurred as a result in the misuse of A & B fluid pumps. Misuse being the over pressurizing of the pumps inlet or outlet sides, manually rotating locked pumps, operating the unit with fluid gun valves closed, A & B fluids crossing over and the disassembly of the pumps by unauthorized or non trained personnel. Pumps returned due to crossing over of materials, or maintenance failure of the pumps will be charged for repairs if repairable. All efforts will be made for repair.

Application Gun

For a period of ninety days from date of original purchase gun (JIC) fittings, gun block, and gun valves will be replaced without charge for performance or workmanship failure. Improper maintenance and care for these items such as failure to clean gun block externally and internally, over-tightening of retaining nut, or solidifying of materials negates this ninety day performance warranty.

Items not under warranty

A & B material hose, Air purge hose, Speed dial, on/off switches, valve handles, electronic cable, machine cart/wheels and gun-handle.

GeoCHEM Inc is not responsible for any expense including inconvenience or consequential damage, including injury to any person, caused by items of our manufacture or sale. Some states do not allow certain exclusions or limitations found in this warranty and therefore they may not apply to you. In any event the total liability of GeoCHEM Inc under any circumstance shall not exceed the full purchase price of this product.